Transient Stability

Time Frame of Power System Dynamic Phenomena

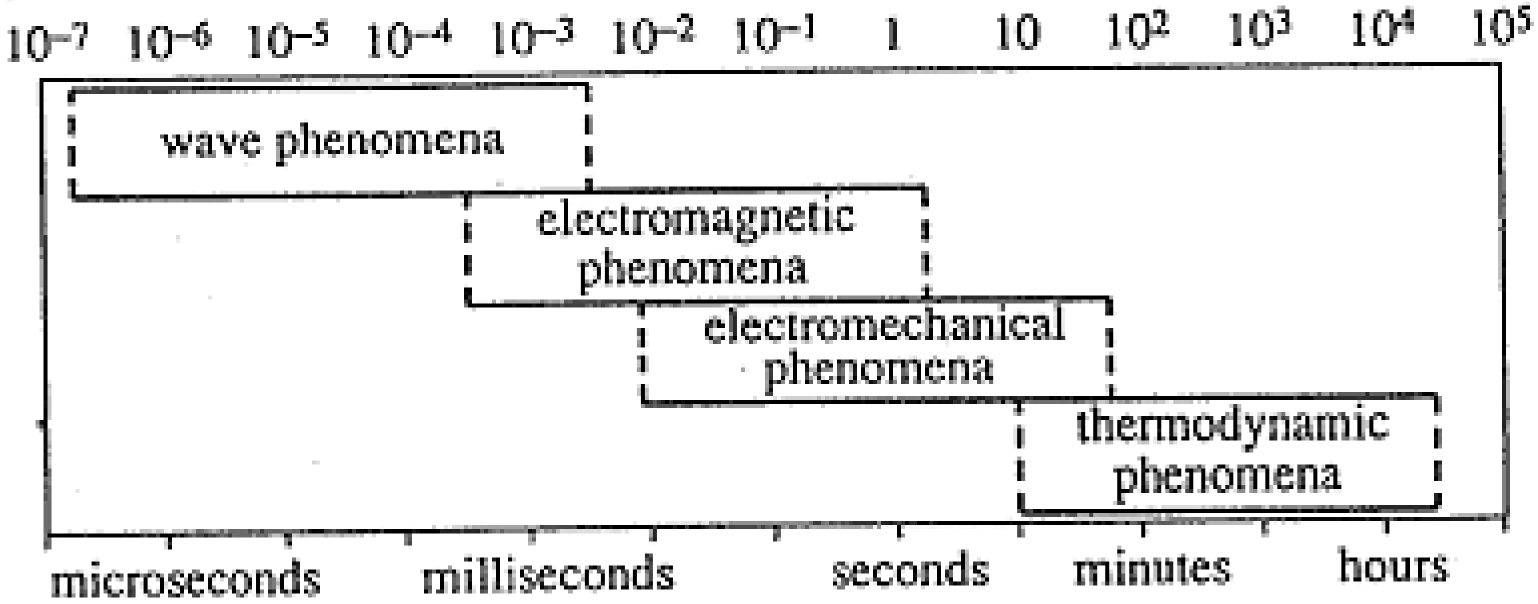
10^{-7}
10^{-6}
10^{-5}
10^{-4}
10^{-3}
10^{-2}
10^{-1}
1
10
10^{2}
10^{3}
10^{4}
10^{5}
wave phenomena
electromagnetic phenomena
electromechanical phenomena
thermodynamic phenomena
microseconds
milliseconds
seconds
minutes
hours

Time frame of the basic power system dynamic phenomena

Introduction

- TS is also called Rotor Stability, Dynamic Stability
- Electromechanical Phenomenon
- All synchronous machines must remain in synchronism with one another
- TS is no longer only the utility's concern
- Co-generation plants face TS problems

Analogy

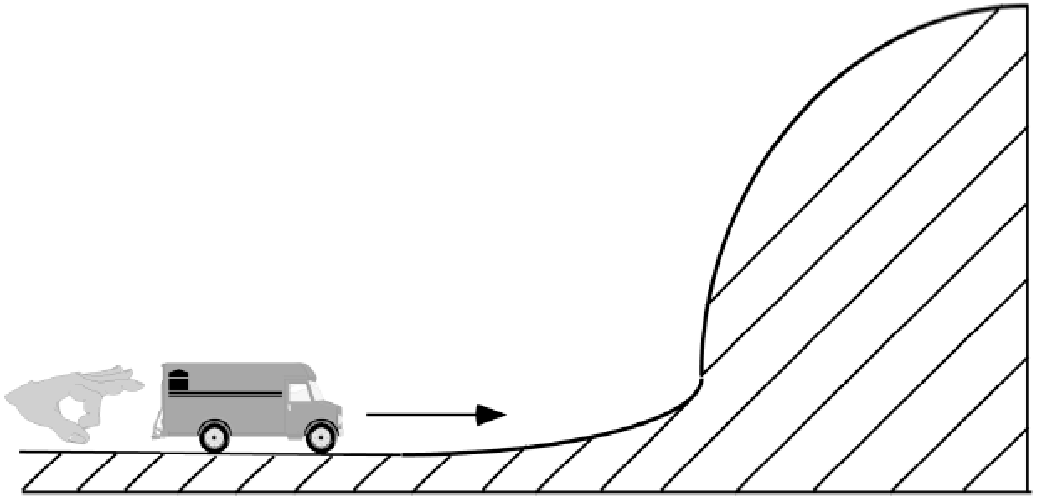

- Which vehicles will pushed hardest?
- How much energy gained by each vehicle?
- Which direction will they move?
- Height of the hill must they climb to go over?

Introduction (cont'd)

- System protection requires consideration of:
  - Critical Fault Clearing Time (CFCT)
  - Critical Separation Time (CST)
  - Fast load transferring
  - Load Shedding
  - …

Causes of Instability

- Short-circuits
- Loss of utility connections
- Loss of a portion of in-plant generation
- Starting of a large motor
- Switching operations (lines or capacitors)
- Impact loading on motors
- Sudden large change in load and generation

Consequences of Instability

- Synchronous machine slip poles – generator tripping
- Power swing
- Misoperation of protective devices
- Interruption of critical loads
- Low-voltage conditions – motor drop-offs
- Damage to equipment
- Area wide blackout
- …

Synchronous Machines

- Torque Equation (generator case)

$$T = \frac{\pi P^2}{8} \phi_{air} \Im_r \sin\delta$$

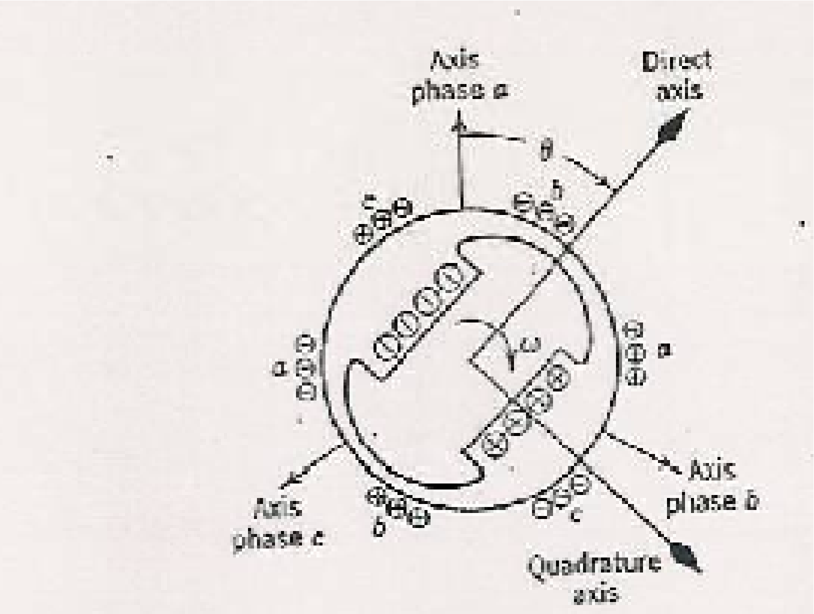
Axis
phase a
Direct
axis
θ
δ
c
b
a
ω
a
Axis
phase b
Axis
phase c
b
c
Quadrature
axis

T = mechanical torque

P = number of poles

ϕ_{air} = air-gap flux

F_r = rotor field MMF

δ = rotor angle

Swing Equation

$$T_a = T_m - T_e$$

$$J\frac{d\omega_m}{dt} = T_a = T_m - T_e$$

$$J = \frac{2H}{\omega_{0m}^2} VA_{base}$$

$$\frac{2H}{\omega_{0m}^2} VA_{base} \frac{d\omega_m}{dt} = T_m - T_e$$

$$\frac{2H}{\omega_0}\frac{d^2\delta}{dt^2} = \overline{T}_m - \overline{T}_e$$

Synchronous Machines (cont'd)

- Swing Equation

$$M\frac{d^2\delta}{dt^2}+D\frac{d\delta}{dt}=P_{mech}-P_{elec}$$

M = inertia constant

D = damping constant

P_{mech} = input mechanical power

P_{elec} = output electrical power

Rotor Angle Responses

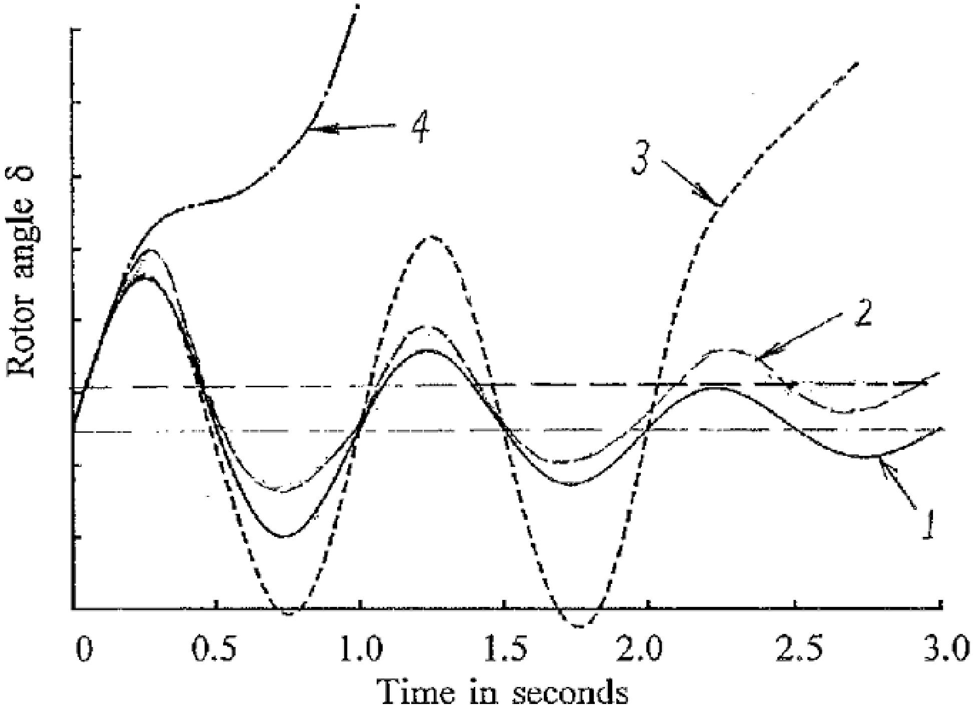

- Case 1: Steady-state stable
- Case 2: Transient stable
- Case 3: Small-signal unstable
- Case 4: First swing unstable

Power and Rotor Angle (Classical 2-Machine Example)

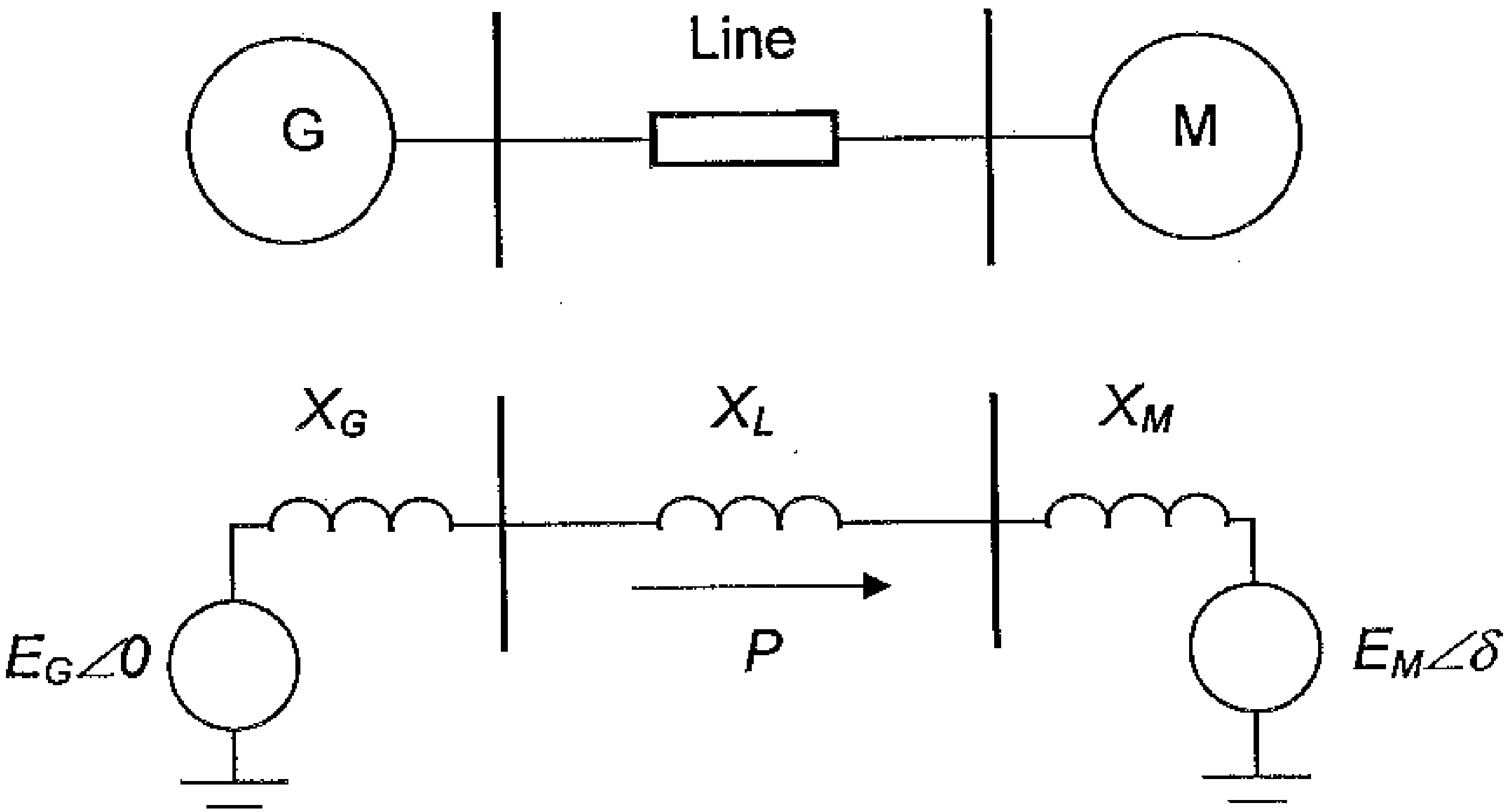
Line
G
M
X_G
X_L
X_M
$E_G\angle 0$
P
$E_M\angle\delta$

Power and Rotor Angle (cont'd)

$$P = \frac{E_G E_M}{X_G + X_L + X_M} \sin\delta$$

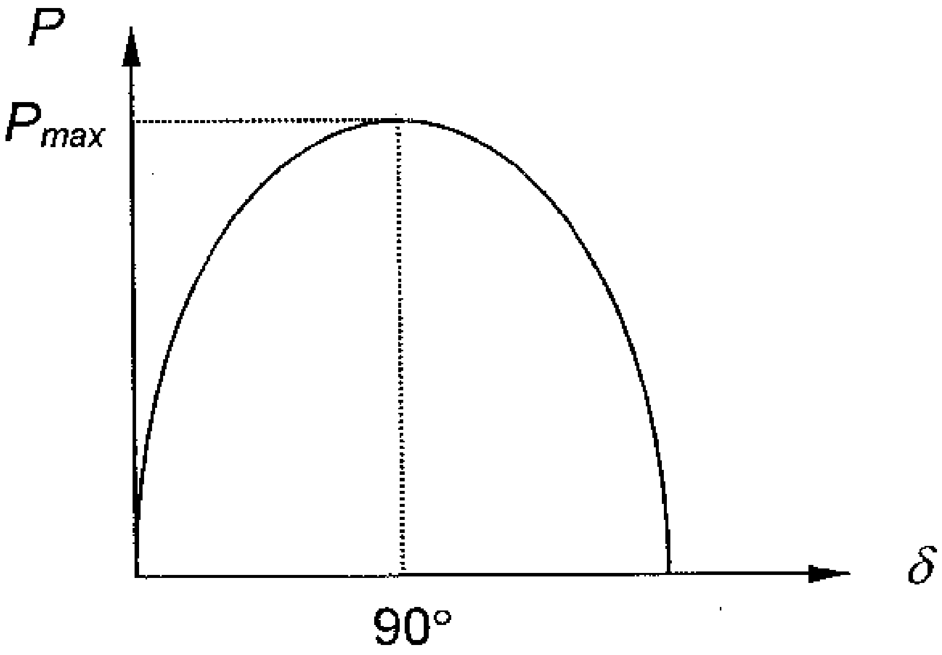

Power and Rotor Angle (Parallel Lines)

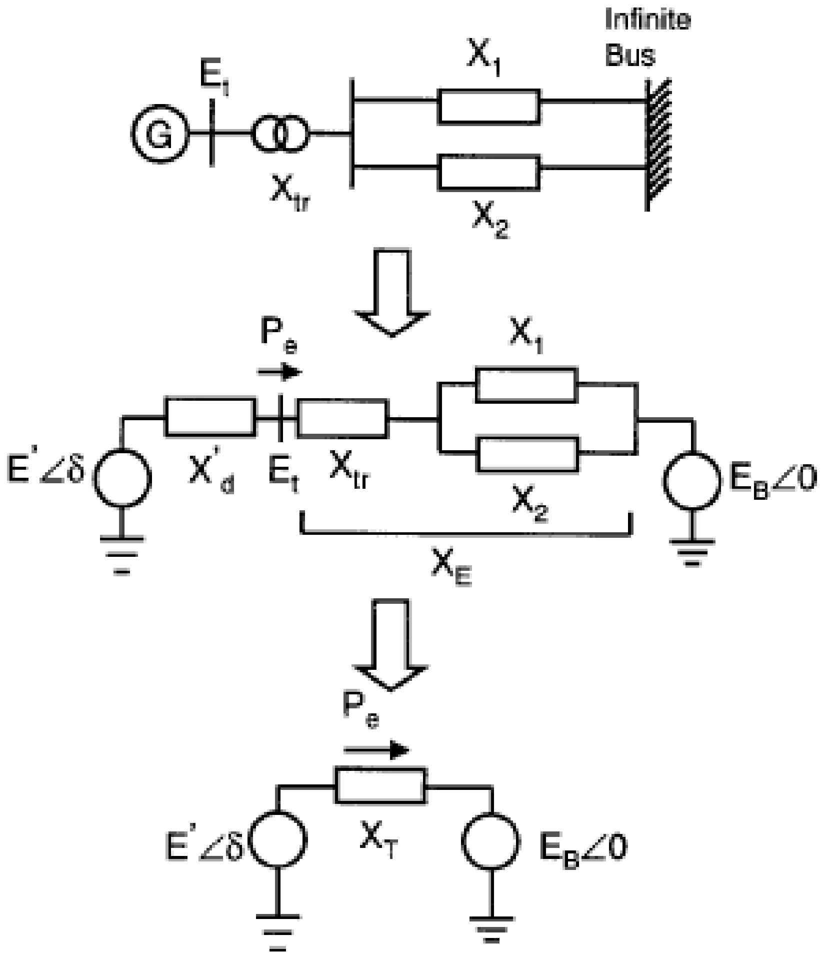
Infinite Bus
X_1
E_t
G
X_{tr}
X_2
P_e
X_1
$E'\angle\delta$
X'_d
E_t
X_{tr}
X_2
$E_B\angle 0$
X_E
P_e
$E'\angle\delta$
X_T
$E_B\angle 0$

Both Lines In Service

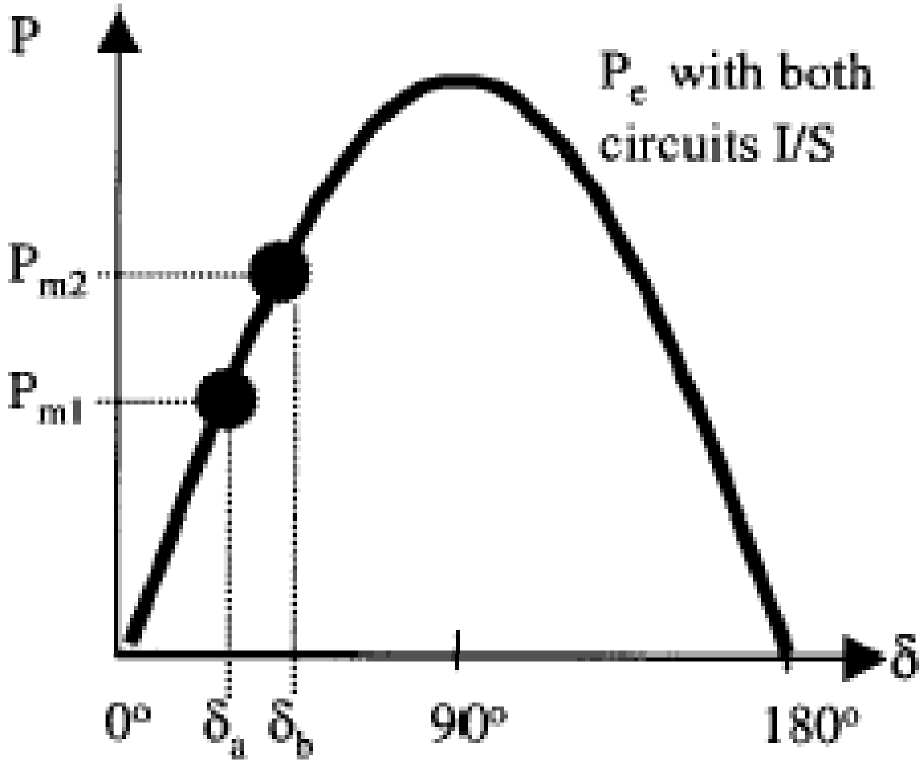

One Line Out of Service

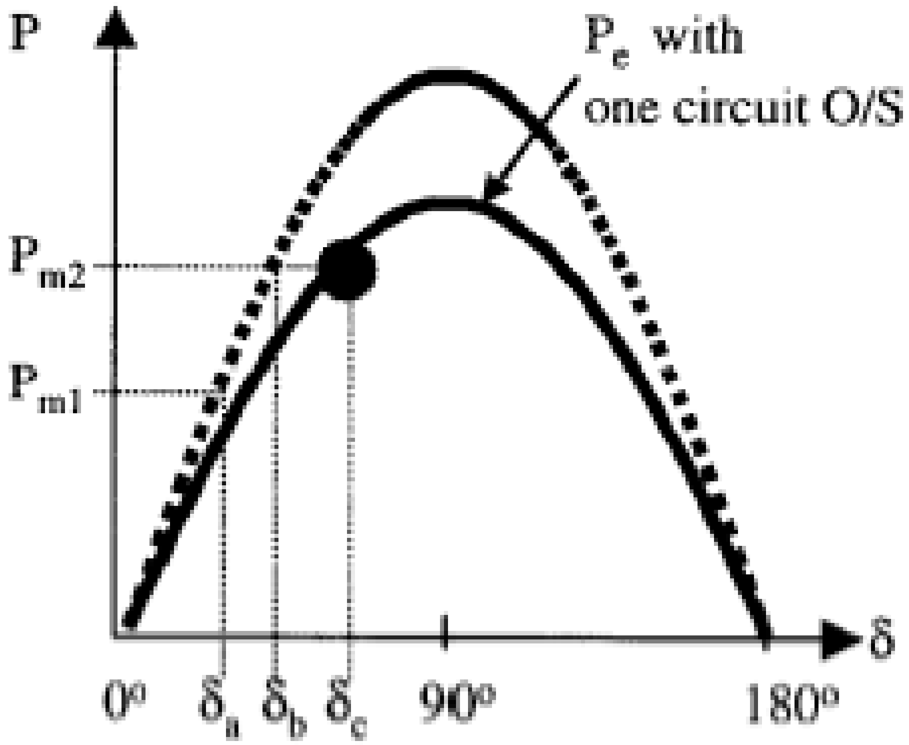

Equal Area Criterion

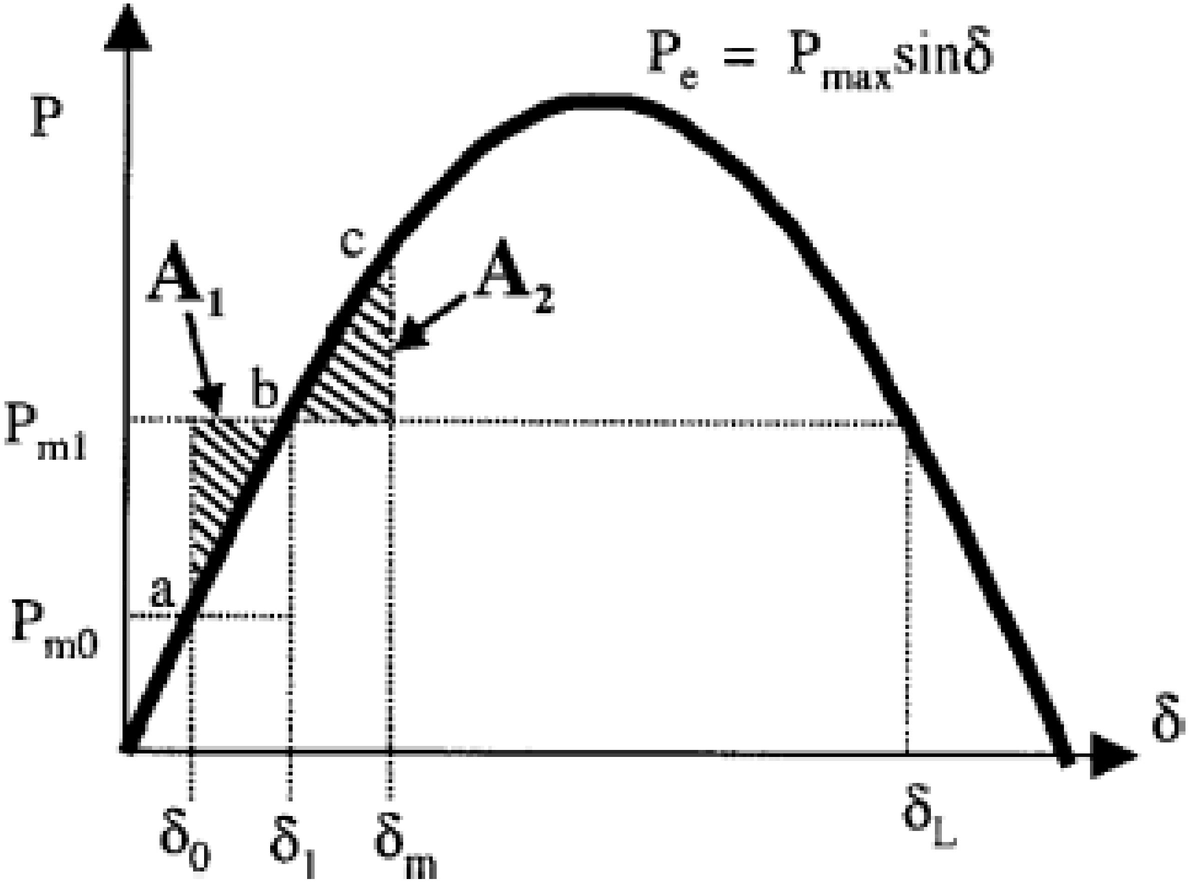

$P_e = P_{max}\sin\delta$
P
P_{m1}
P_{m0}
A_1
A_2
a
b
c
δ
δ_0
δ_1
δ_m
δ_L

Equal Area Criterion

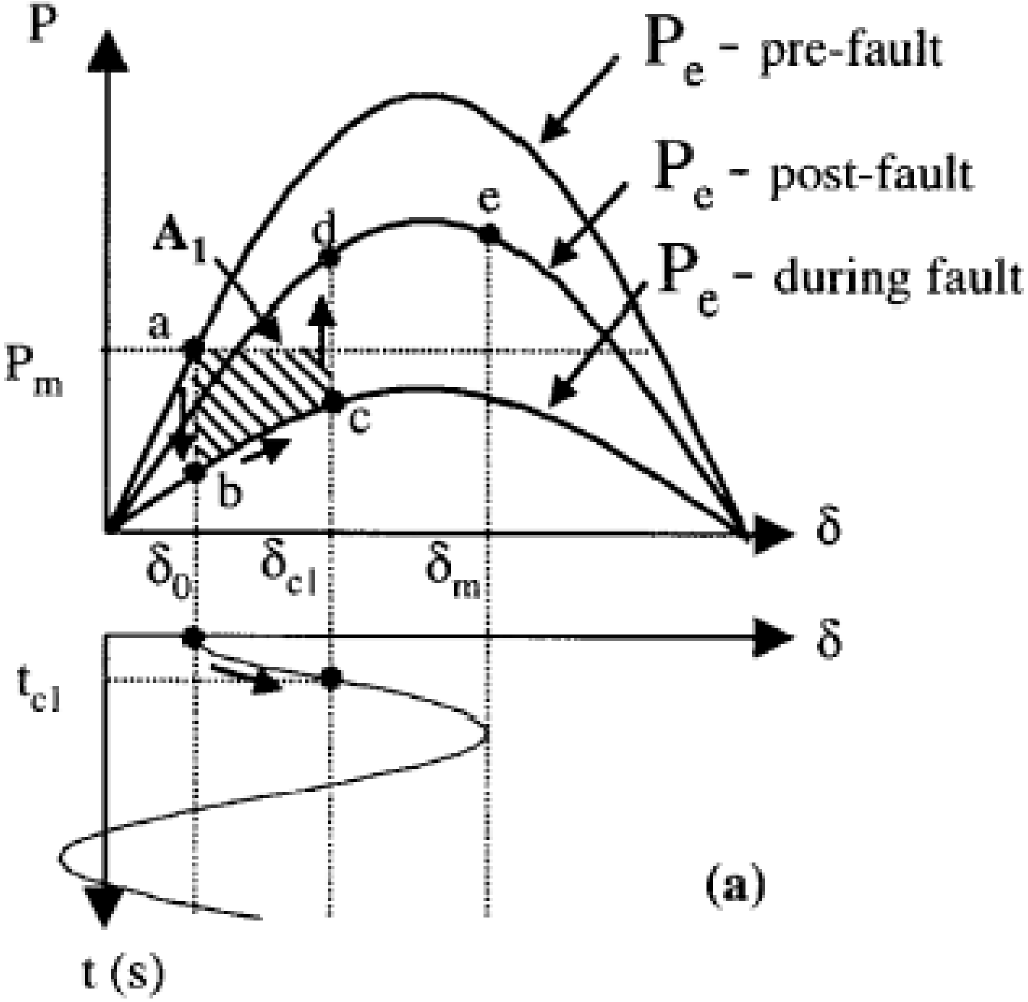
P
P_e - pre-fault
P_e - post-fault
P_e - during fault
A_1
a
b
c
d
e
P_m
δ
δ_0
δ_{cl}
δ_m
δ
t_{cl}
t (s)
(a)

Equal Area - Stable

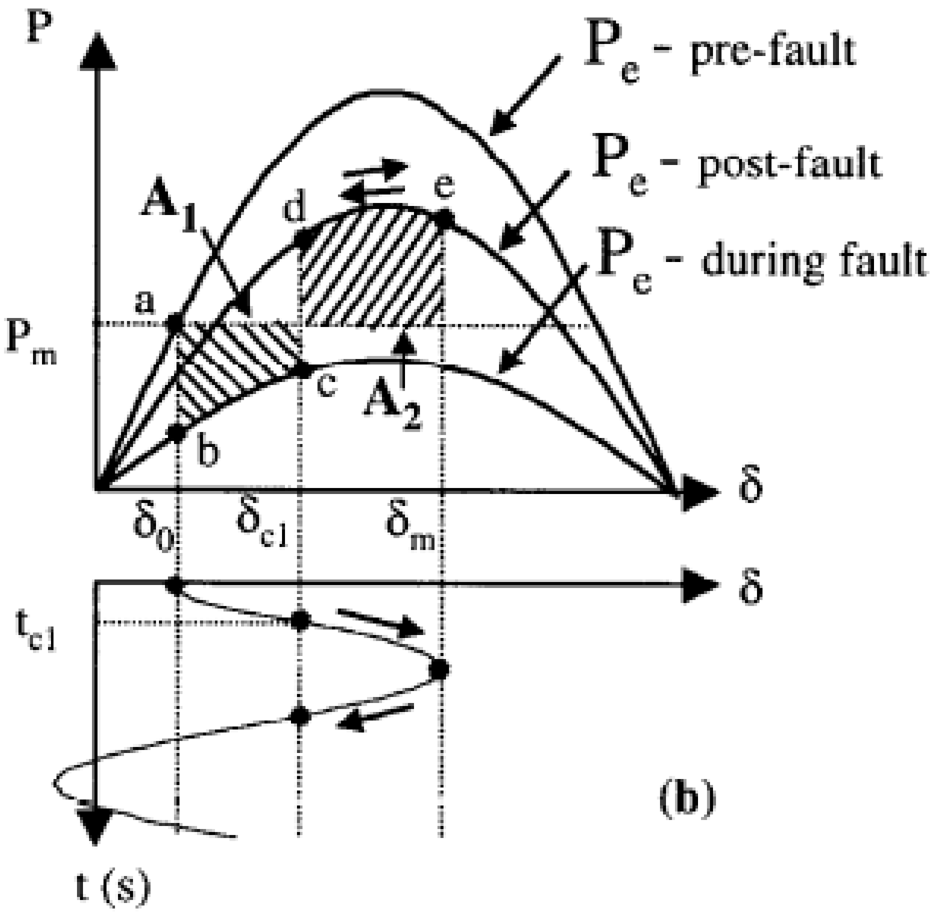
P
P_e - pre-fault
P_e - post-fault
P_e - during fault
A_1
d
e
a
P_m
c
A_2
b
δ
δ_0
δ_{c1}
δ_m
δ
t_{c1}
(b)
t (s)

Equal Area – Unstable

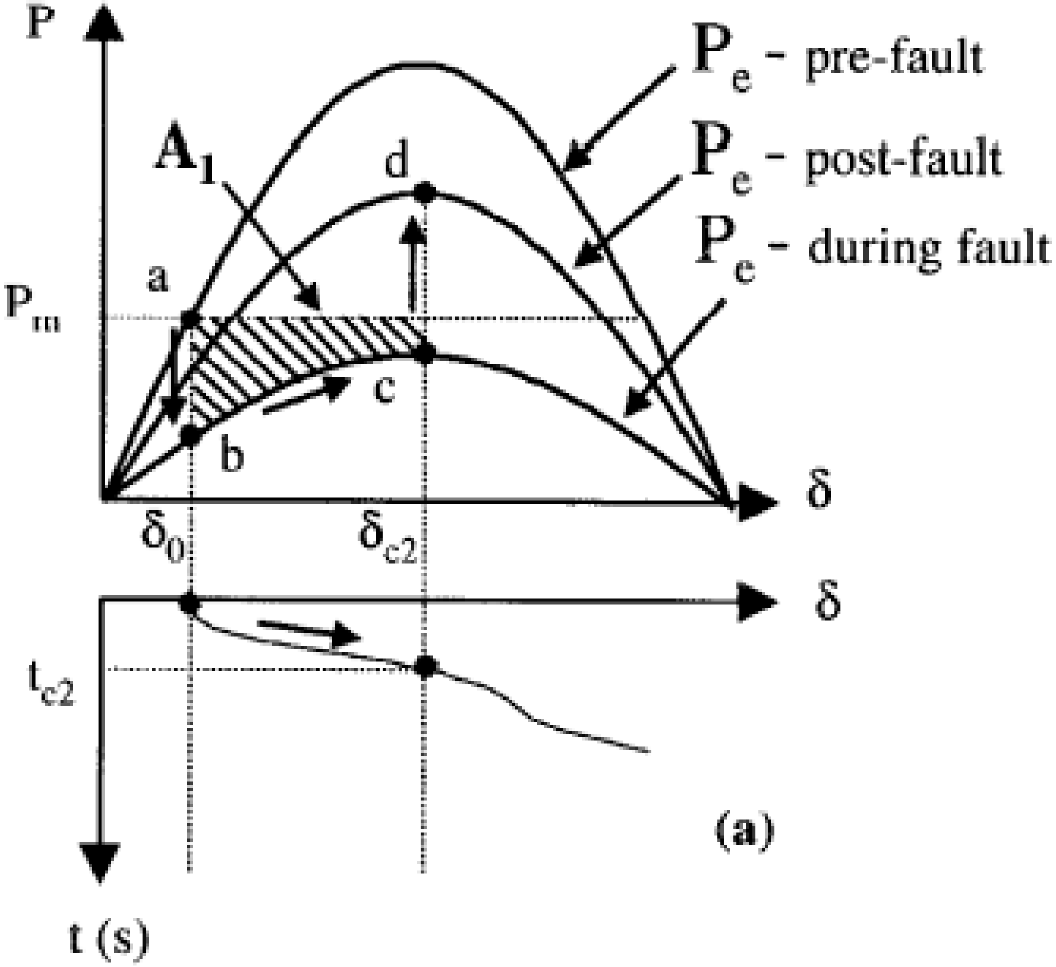
P
P_e - pre-fault
P_e - post-fault
P_e - during fault
A_1
d
a
P_m
c
b
δ
δ_0
δ_{c2}
δ
t_{c2}
(a)
t (s)

Equal Area - Unstable

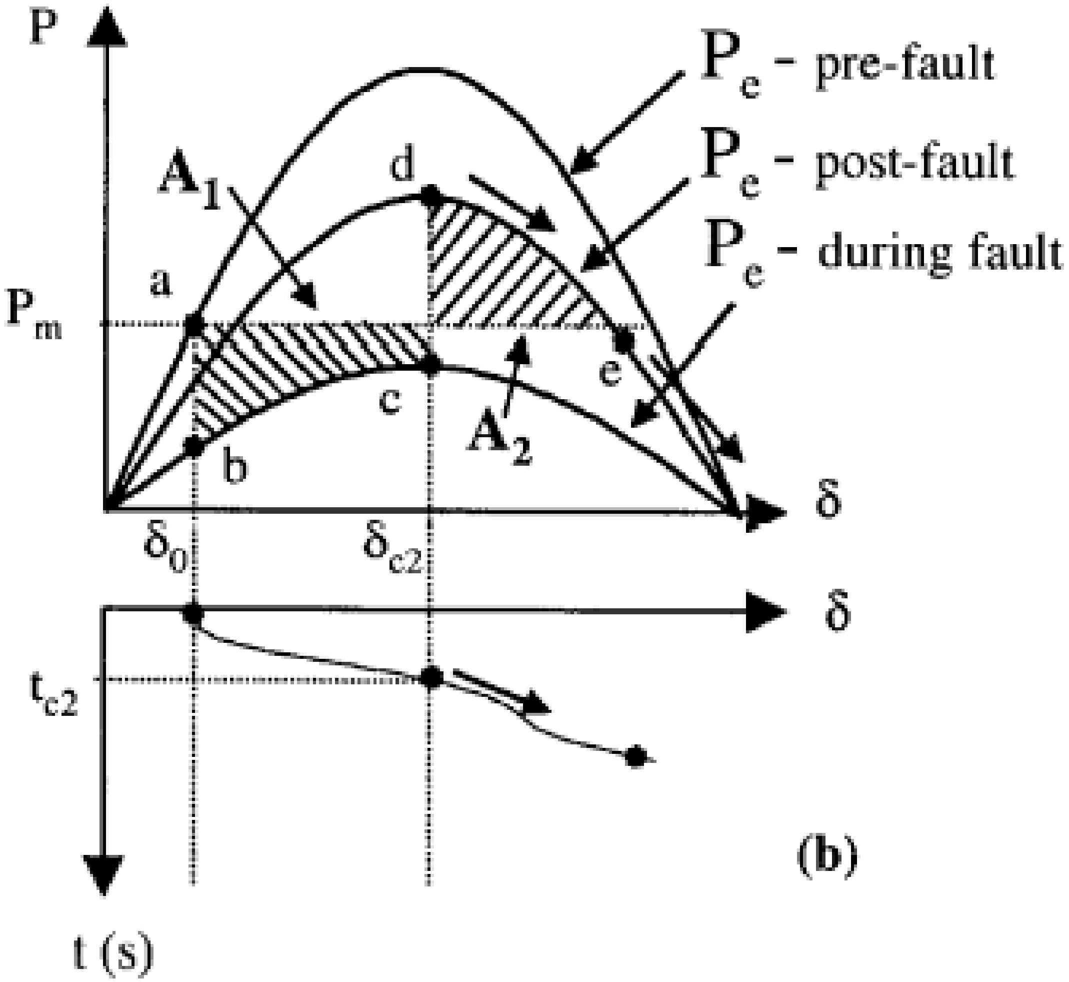
P
A1
d
Pe - pre-fault
Pe - post-fault
Pe - during fault
a
Pm
e
c
A2
b
δ
δ0
δc2
δ
tc2
(b)
t (s)

Power System Stability Limit

- Steady-State Stability Limit
  - After small disturbance, the synchronous generator reaches a steady state operating condition identical or close to the pre-disturbance
  - Limit: $\delta < 90°$

Power System Stability Limit (con'd)

- Transient and Dynamic Stability Limit
  - After a severe disturbance, the synchronous generator reaches a steady-state operating condition without a prolonged loss of synchronism
  - Limit: $\delta < 180^\circ$ during swing

Generator Modeling

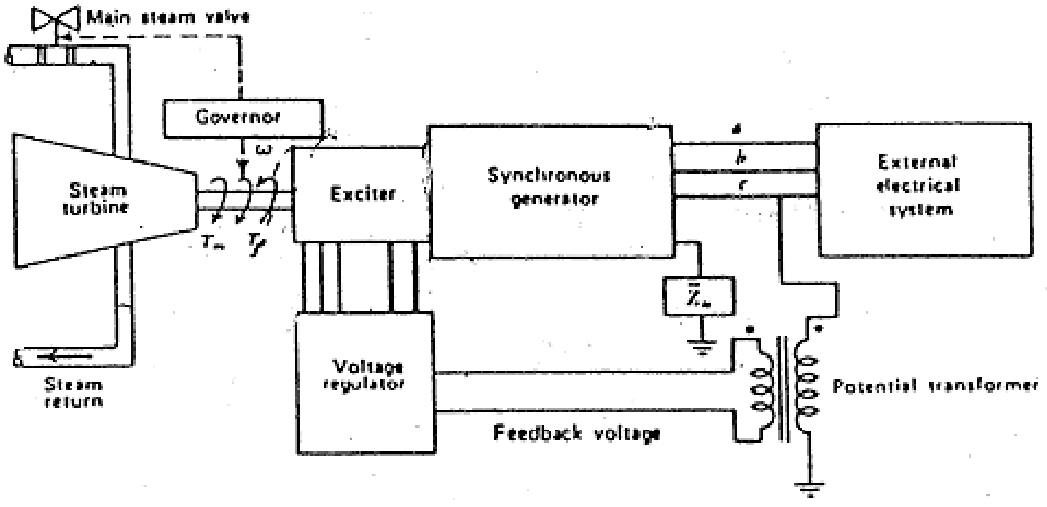
Main steam valve
Governor
ω
Steam turbine
Exciter
Synchronous generator
a
b
c
External electrical system
T_m
T_f
$\bar{Z}_n$
Voltage regulator
Potential transformer
Feedback voltage
Steam return

- Machine

  Equivalent Model / Transient Model / Subtransient Model

- Exciter and Automatic Voltage Regulator (AVR)
- Prime Mover and Speed Governor
- Power System Stabilizer (PSS)

Generator Modeling (con'd)

- Typical synchronous machine data

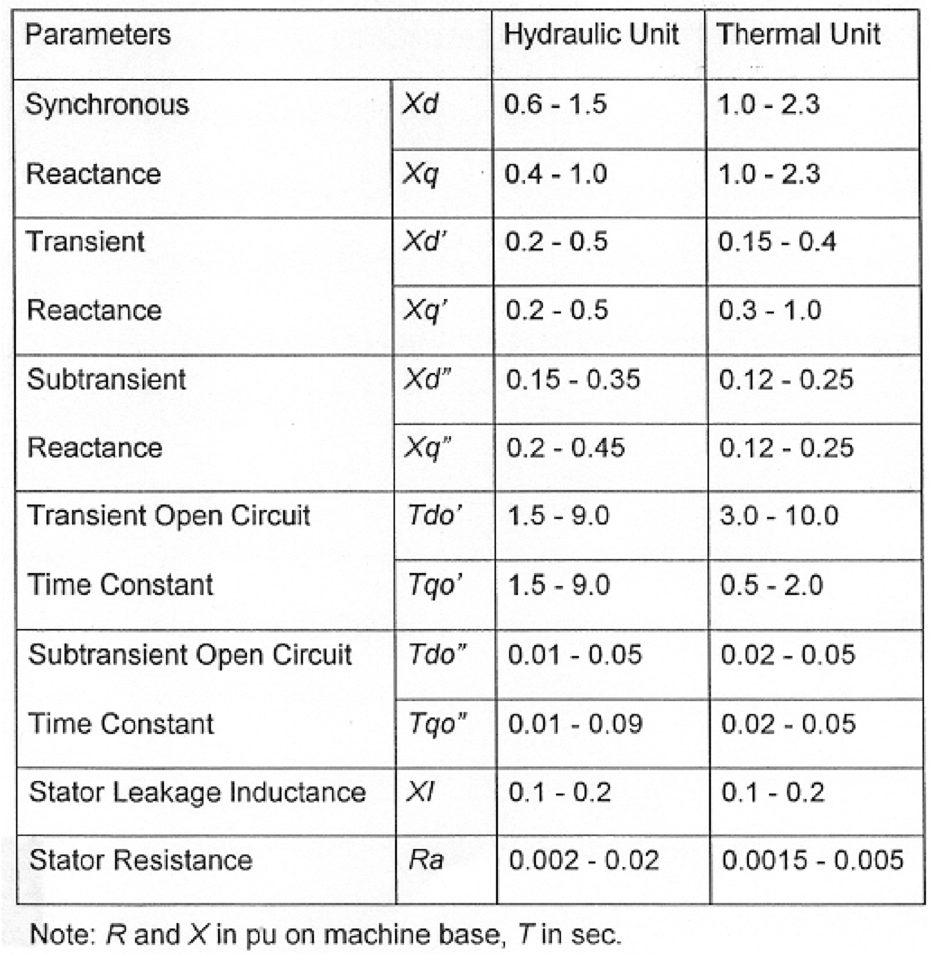

Parameters		Hydraulic Unit	Thermal Unit
Synchronous Reactance	Xd	0.6 - 1.5	1.0 - 2.3
	Xq	0.4 - 1.0	1.0 - 2.3
Transient Reactance	Xd'	0.2 - 0.5	0.15 - 0.4
	Xq'	0.2 - 0.5	0.3 - 1.0
Subtransient Reactance	Xd''	0.15 - 0.35	0.12 - 0.25
	Xq''	0.2 - 0.45	0.12 - 0.25
Transient Open Circuit Time Constant	Tdo'	1.5 - 9.0	3.0 - 10.0
	Tqo'	1.5 - 9.0	0.5 - 2.0
Subtransient Open Circuit Time Constant	Tdo''	0.01 - 0.05	0.02 - 0.05
	Tqo''	0.01 - 0.09	0.02 - 0.05
Stator Leakage Inductance	Xl	0.1 - 0.2	0.1 - 0.2
Stator Resistance	Ra	0.002 - 0.02	0.0015 - 0.005

Note: R and X in pu on machine base, T in sec.

Factors Influencing TS

- Post-Disturbance Reactance seen from generator.

  Reactance ↓ Pmax ↓

- Duration of the fault clearing time.

  Fault time ↑ Rotor Acceleration ↑ Kinetic Energy ↑

  Dissipation Time during deceleration ↑

- Generator Inertia.

  Inertia ↑ Rate of change of Angle ↓ Kinetic Energy ↓

- Generator Internal Voltage

  Internal Voltage ↓ Pmax ↓

Factors Influencing TS

- Generator Loading Prior To Disturbance

  Loading ↑ Closer to Pmax. Unstable during acceleration

- Generator Internal Reactance

  Reactance ↓ Peak Power ↑ Initial Rotor Angle ↓

  Dissipation Time during deceleration ↑

- Generator Output During Fault

  Function of Fault Location and Type of Fault

Solution to Stability Problems

- Improve system design
  - Increase synchronizing power
- Design and selection of rotating equipment
  - Use of induction machines
  - Increase moment of inertia
  - Reduce transient reactance
  - Improve voltage regulator and exciter characteristics

Solution to Stability Problems

- Reduction of Transmission System Reactance
- High Speed Fault Clearing
- Dynamic Braking
- Regulate Shunt Compensation
- Steam Turbine Fast Valving
- Generator Tripping
- Adjustable Speed Synchronous Machines

Solution to Stability Problems

- HVDC Link Control
- Current Injection from VSI devices
- Application of Power System Stabilizer (PSS)
- Add system protections
  - Fast fault clearance
  - Load Shedding
  - System separation